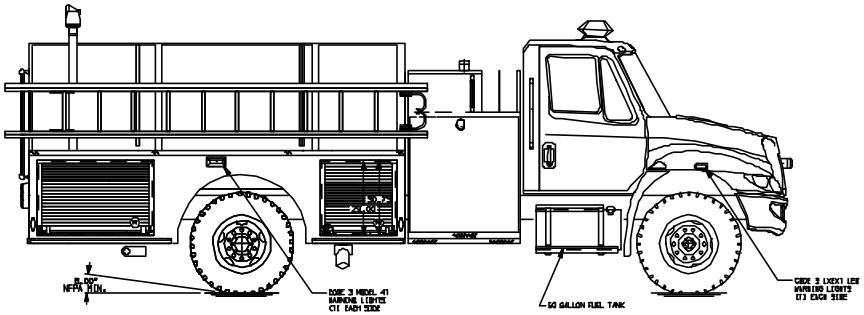

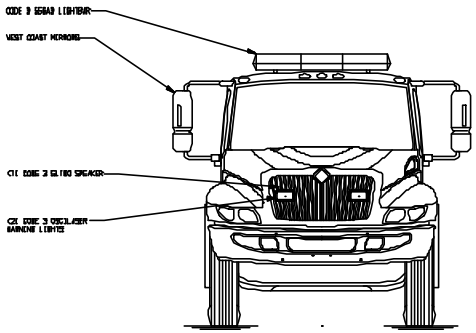

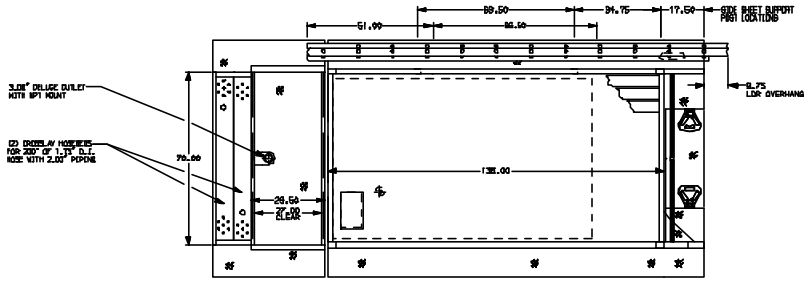

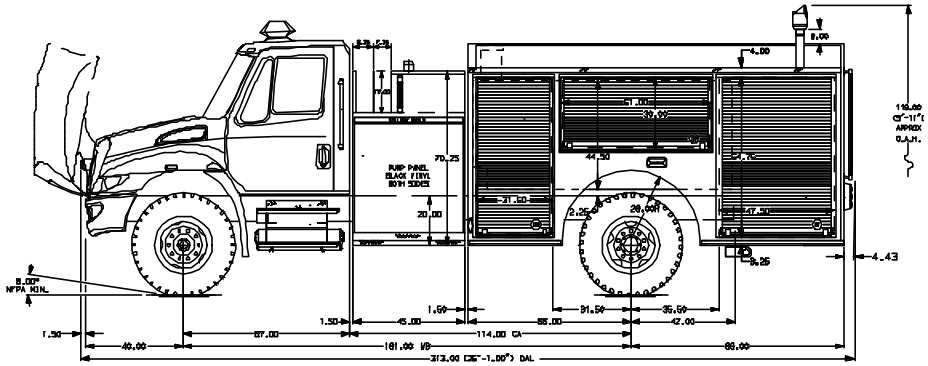

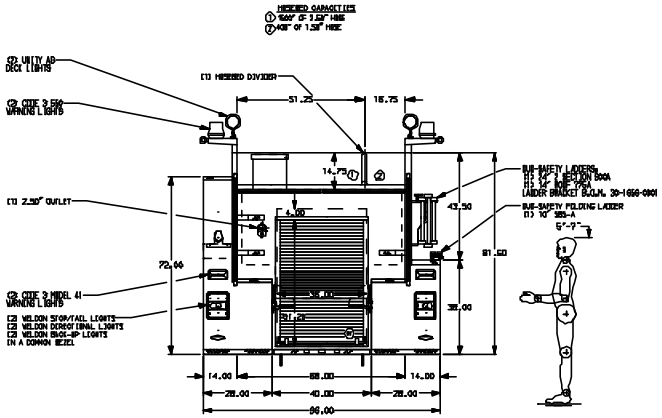

ALUMINUM BODY

NOTE

DIMENSIONS SHOWN ARE APPROXIMATE AND ARE SUBJECT TO MINOR DEVIATIONS AS MAY OCCUR OR BE NECESSARY IN CONSTRUCTION.
MINOR DETAILS NOT SHOWN.

1. PERIMETER SCENE LIGHTS LOCATED PER EMOR BUYER.
2. AIR INLET LOCATED ON THE DRIVER SIDE PUMP PANEL.
3. RECEPTACLE FOR BATTERY CHARGER LOCATED ON THE DRIVER SIDE PUMP PANEL

REV.	DATE	BY	CHK'D	
				CHASSIS DATA
				CHASSIS
				CHC
-	-	-	-	MODEL 440Ø

PIERCE MANUFACTURING INC.
APPLETON, WISCONSIN

TITLE	125D-D-100D POLY, 152 BODY, 4S SIDE CONTROL REAR OUTLET, (2) CROSSLAYS, DELUGE	JOB NO.	7041
		DATE	SCALE 1:24
FOR	PIERCE MANUFACTURING INC. APPLETON, WISCONSIN	ORIGINATOR	DRAWN BY MFI
		-	CHK'D BY -
DRWG. NO.	7041AD	SHEET NO. 1 OF 1	SHEET SIZE D