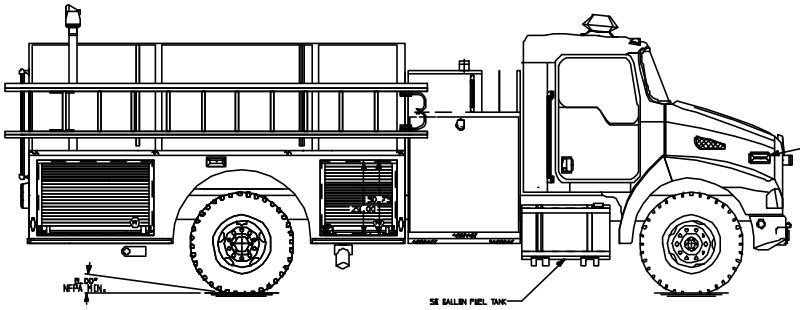

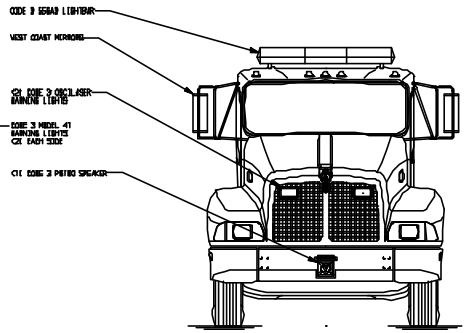

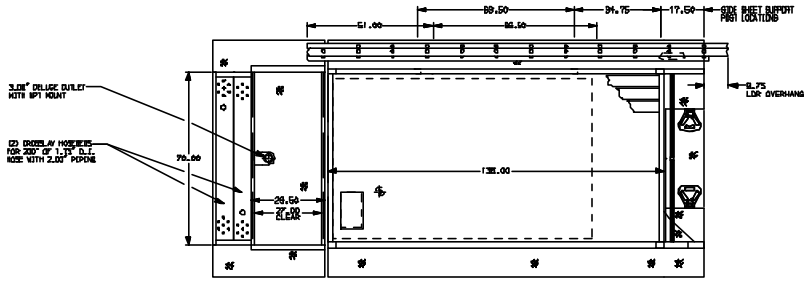

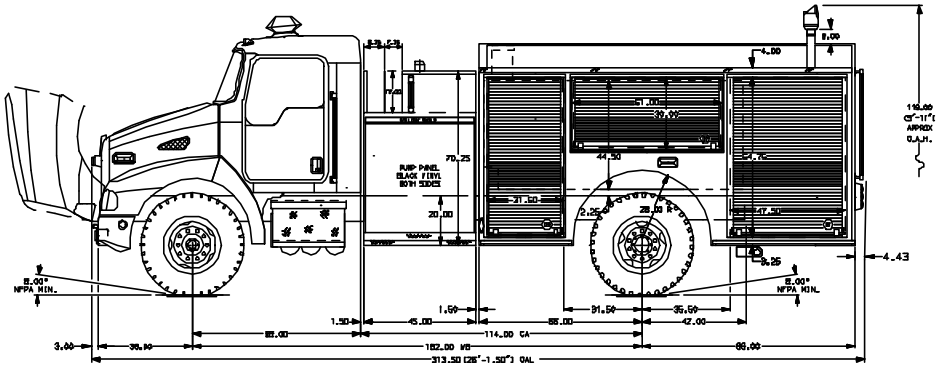

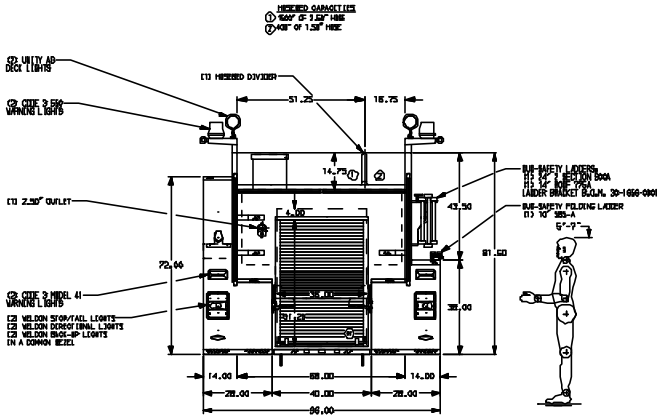

ALUMINUM BODY

NOTE

DIMENSIONS SHOWN ARE APPROXIMATE AND ARE SUBJECT TO MINOR DEVIATIONS AS MAY OCCUR OR BE NECESSARY IN CONSTRUCTION.
MINOR DETAILS NOT SHOWN.

1. PERIMETER SCENE LIGHTS LOCATED PER BOOK INFO.
2. AIR INLET LOCATED ON THE DRIVER SIDE PUMP PANEL
3. RECEPTACLE FOR BATTERY CHARGER LOCATED ON THE DRIVER SIDE PUMP PANEL

REV.	DATE	BY	CHK'D	
				CHASSIS DATA
				CHASSIS
▽	-	-	-	KENWORTH
▽	-	-	-	MODEL T300

PIERCE MANUFACTURING INC.
APPLETON, WISCONSIN

TITLE	125D-D-1000 POLY, 152 BODY, 45 SIDE CONTROL REAR OUTLET, (2) CROSSLAYS, DELUGE	
FOR	PIERCE MANUFACTURING INC. APPLETON, WISCONSIN	
DRWG. NO.	7045AD	

JOB NO.	7045
DATE	SCALE 1:24
28NOV00	DRAWN BY MFI
16SEP02	CHK'D BY ----
SHEET NO. 1 OF 1	SHEET SIZE D